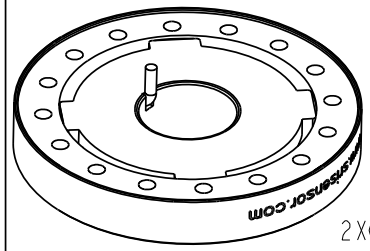

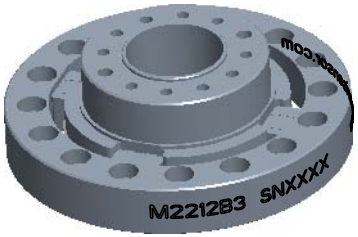

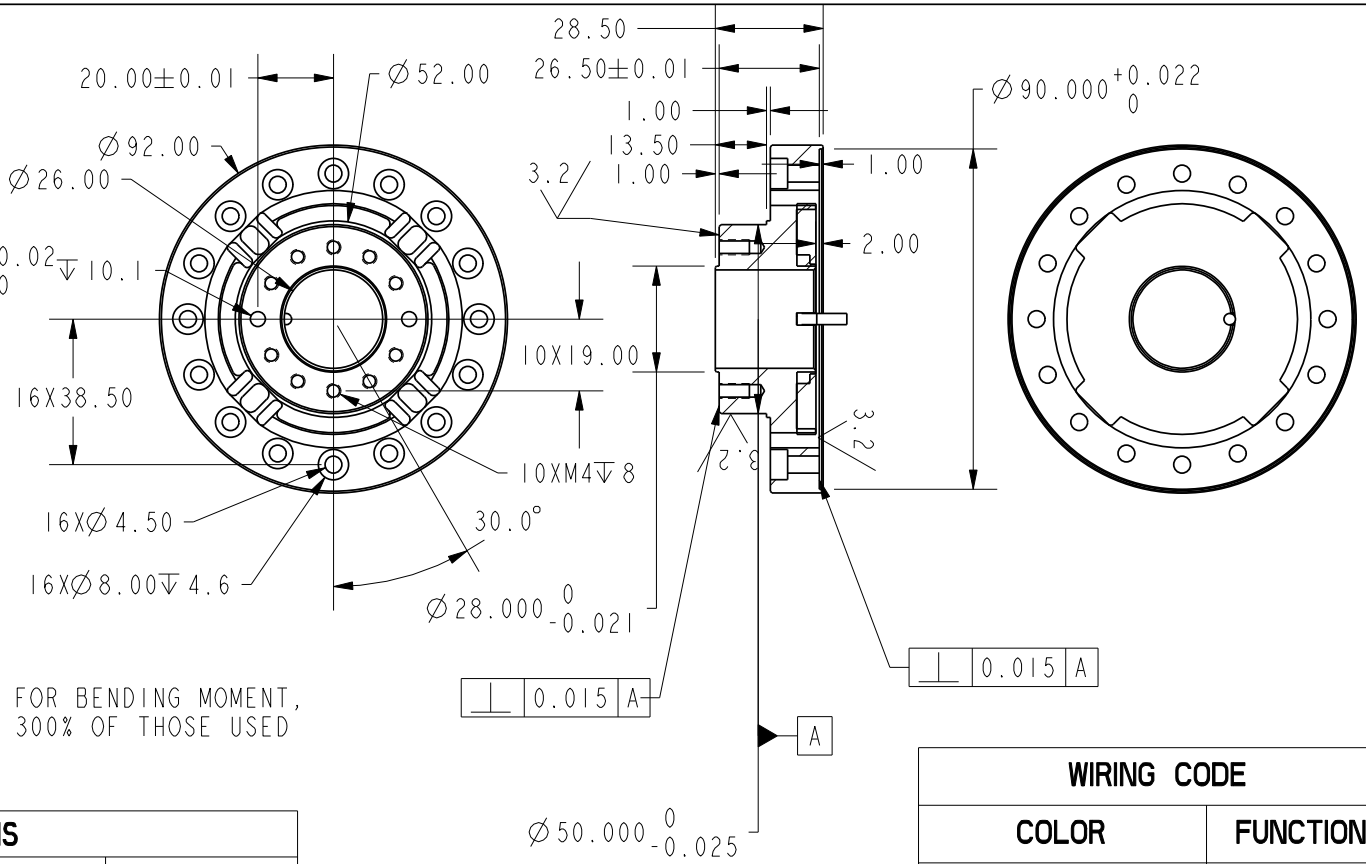

NOTE: THE OVERLOAD CAPACITIES FOR BENDING MOMENT, AXIAL AND RADIAL FORCE EXCEED 300% OF THOSE USED FOR CROSSTALK MEASUREMENT

SPECIFICATIONS	
CAPACITY (Nm)	140
OVERLOAD CAPACITY (%F.S.)	300
DIFFERENTIAL OUTPUT @ F.S. (V)	2.5±2
POWER SUPPLY (V)	5V
BRIDGE RESISTANCE (Ω) NOMINAL	350
NON-LINEARITY (%F.S.)	0.5
HYSTERESIS (%F.S.)	1.0
OPERATING TEMP. RANGE (°C)	-20 TO +100
CROSSTALK (%F.S.)	1.0
AXIAL FORCE FOR CROSSTALK (N)	600
RADIAL FORCE FOR CROSSTALK (N)	600
BENDING MOMENT FOR CROSSTALK (Nm)	60
TORSION ANGLE (CALCULATED)	0.04°
TORSIONAL STIFFNESS (KNm/RAD)	200
MASS (KG)	0.60

WIRING CODE	
COLOR	FUNCTION
RED	+EX
GREEN	+SIG
BLACK	GND
BROWN	-SIG

SUNRISE INSTRUMENTS

www.srisensor.com

SINGLE AXIS TORQUE LOADCELL
D92MM, 140 Nm

UNLESS OTHERWISE SPECIFIED DIMENSIONS ARE IN MM	M2212B3	REV. 0.1